www.lightsky.com.cn

Fly Dragon Lighting Equipment Co., Ltd.

Add : NO.4 JINGNENG ROAD 1, HUADU DISTRICT, GUANGZHOU, CHINA.
Tel : 020-61828288 Fax : 020-61828188 Postal Code : 510820
Email : flydragon@lightsky.com.cn

Social Media

LiGHT SKY Wechat

LiGHT SKY

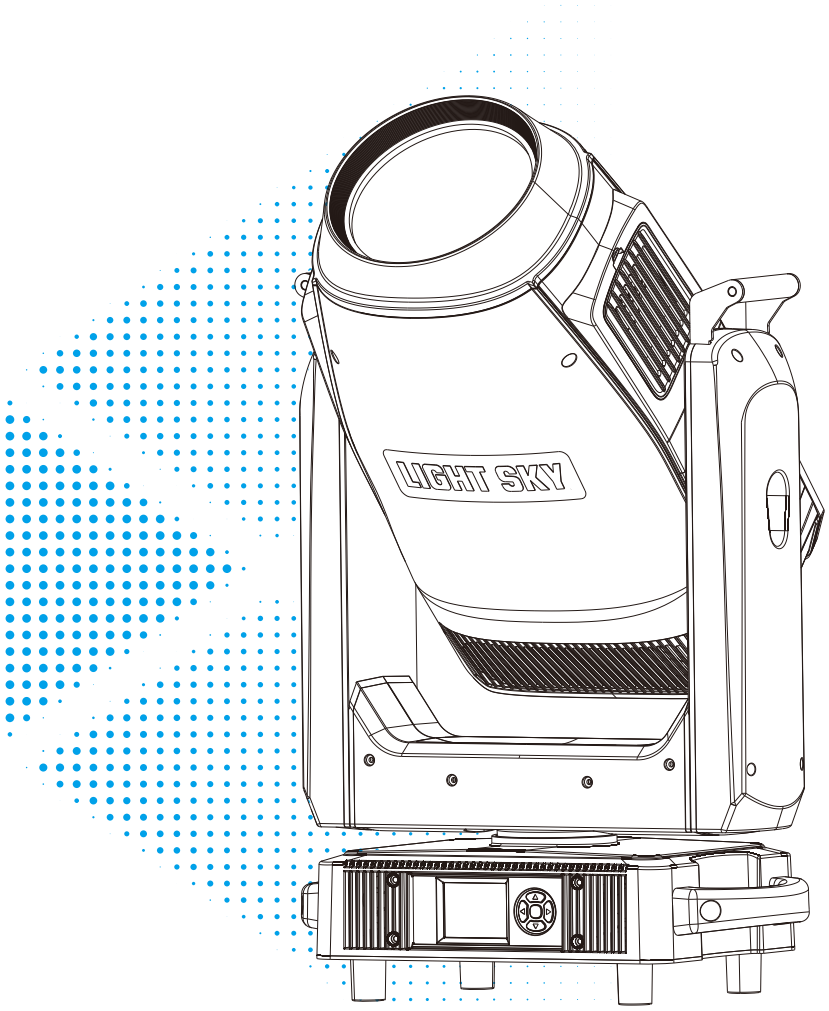

SUPER SCOPE COLOR

User Manual

Please read the instruction carefully before use

CONTENTS

1、Safety Instructions.....2

2、Technical Specifications.....5

2.1、Attachment And Size.....8

3、Prism/Effect/Pattern.....10

3.1、Replacing Rotating Gobos 11

4、Control Panel.....14

5、Connection and control.....15

5.1、Power supply connection 15

5.2、DMX 512 Connection.....16

6、How To Set The Unit.....17

6.1、Main Function 17

6.2、Channel Setting 20

6.3、Address Setting 20

6.4、DMX 512 Configuration 21

7、 Electrical Connection Diagram 35

8、 Troubleshooting 36

9、Fixture Cleaning 38

10、Duty exonerative and copyright protection 38

Congratulations on choosing our company product! We thank you for your custom.

- Please keep in mind that this product, like other products of the company, adheres to the concept of people-oriented design and manufacture, and takes product quality as the foundation.
- We put the interests of customers first, and do our best to meet customer requirements.
- Please read this instruction manual carefully and keep it for future reference. In the case of fully understanding the product information, strictly abide by theUse the instruction manual to ensure that the product is installed, used and serviced correctly and safely.
- Our company is not responsible for any damage to lamps or other performance due to personal failure to follow the instructions during installation, use and maintenance.responsibility.
- Our company reserves the right to modify the manual at any time and without prior notice.

1.Safety Instructions

WARNING

Please read the instruction carefully which includes important information about the installation, usage and maintenance.

Please keep this User Manual for future consultation. If you sell the unit to another user, be sure that they also receive this manual.

The following symbols are used to identify important safety information on the product and in this manual:

WARNING! Safety hazard. Risk of severe injury or death.

WARNING! Refer to manual betore installing, powering or servicing.

WARNING! Hazardous voltage. Risk of severe or lethal electric shock.

WARNING! Fire hazard.

WARNING! Burn hazard. Hot surface.not touch.Do not touch

WARNING! Risk of eye injury.Safety glasses must be worn.

WARNING! Risk of hand injury.Safety gloves must be worn.

WARNING! Avoid direct eye contact

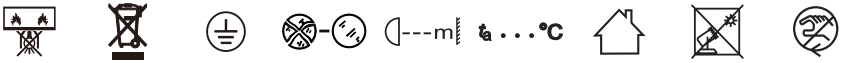

DANGER! Applies only to luiminaires directly mounted on surfaces of non-combustible materials

DANGER! Do not discard Trash can

DANGER! Mark of ground

DANGER! Replace all shatter shields

DANGER! Take a short distance from the object to be photographed (meters)

DANGER! Rated maximum ambient temperature

DANGER! Indoor use only

DANGER! Do not point the lens towards the sun or strong light

DANGER! Operation not allowed during runtime

Important:
Damages caused by the disregard of this user manual are not subject to warranty. The dealer will not accept liability for any resulting defects or problems.

— Unpack and check carefully to ensure that there is no transportation damage before using the unit.

— This product is for indoor use only. Use only in a dry location.

— Do install and operate by qualified operator.

— The light source in this luminaire should be replaced by the manufacturer or its service agent or a similarly qualified person, always cut off the power supply before replacing he light source.

— Do not allow children to operate the fixture.

— Use safety chain when fixing the unit. Handle the unit by carrying its base instead of head only.

— The unit must be installed in a location with adequate ventilation, at least 50cm from adjacent surfaces.

— Be sure that no ventilation slots is blocked, otherwise the unit will be overheated.

— Before operation, ensure that you are connecting this product to the proper voltage in accordance with the specifications in this manual or on the product's specification label.
— It's important to ground the yellow/green conductor to earth in order to avoid electric shock.
— Minimum ambient temperature Ta: -10°C. Maximum ambient temperature Ta: 45°C.
— Do not operate this product at a lower or higher temperature.
— Do not connect the device to any dimmer pack.
— When the lamp is running, do not place combustible objects next to it. The shortest distance between the device and inflammable and explosive objects or materials is 1 m.
— Make sure the power cord is not crimped or damaged; replace it immediately if damaged.
— Unit's surface temperature may reach up to 75°C. Do not touch the housing bare-handedduring its operation.
— Avoid any flammable liquids, water or metal from entering the unit. Once it happens, cut off the mains power immediately.
— Do not operate in a dirty or dusty environment. Do clean the fixture regularly.
— Do not touch any wire during operation as there might be a hazard of electric shock.
— Avoid entanglement of the power cord with other wires.
— The distance between the luminaire and the irradiated surface shall be greater than 3 meters.
— Do not shine light directly into another fixture's lens. Intense beam can damage internal components.
— Direct sunlight or any other strong light beam penetrating the front lens of the luminaire can cause severe internal damage. During unpacking, installation, operation, and xtended idle periods outdoors, it is prohibited to expose the front lens of the luminaire to beams of direct sunlight or any other strong light source from any angle.

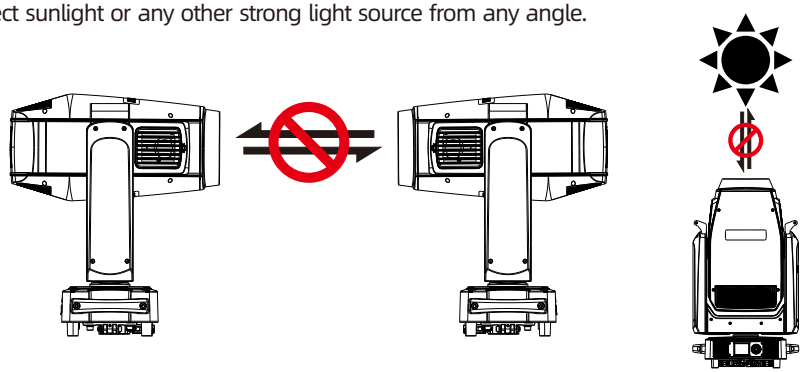

— In the event of serious operating problem, stop using the unit immediately.
— Never turn on and off the unit time after time.
— The housing, the lenses, or the ultraviolet filter must be replaced if they are visibly damaged.

— Do not open the housing as there are no user serviceable parts inside.
— Do not attempt to operate this unit if it becomes damaged. Do not attempt any repairs yourself. Repairs carried out by unskilled people can lead to damage or malfunction. Please contact the nearest authorized technical assistance center if needed.
— Disconnect this product from its power source before servicing.
— Do use the original packaging if the device is to be transported.
— Avoid direct eye exposure to the light source while the product is on.
— Do not operate this product if you see damage on the housing, shields, or cables. Have the damaged parts replaced by an authorized technician at once.

Installation:

The luminaire must be securely fastened to the quick-lock hook with screws to prevent vibration or slipping during operation. The supporting structure must be able to withstand 6 times the weight of the luminaire. Additionally, a safety cable must be installed that can endure 30 free-fall drops from 300mm without failure. Installation should only be performed by qualified professionals, and the luminaire must be mounted in an area inaccessible to unauthorized personnel or away from pedestrian traffic.

2.Technical Specifications

OPTICS

- Light source: 600W five color LED module (RGBAL)
- Field Angle: 5.9 ° -52 °
- Optical lens: coated with high anti reflective film, diameter 180mm
- Color temperature: 2700-8000 K
- Color rendering index: Ra≥95
- Illuminance: 12500 lx @10m
- Whole lamp output luminous flux: 17600 lm
- LED source life expectancy: 50000 h (*LED source life depends on several factors, including but not limited to:environmental conditions, control dimming, power supply and voltage, switchingcycle, fixture mode, etc.)
- Utilizes the iCC ™ Color Calibration System.

COLOUR

- 165 electronic color chips with rich colors
- Virtual CMY
- Virtual CTO

PATTERN

- 2 rotating pattern disks, 14 glass pattern pieces, with a dynamic stacking effect that can be plugged and replaced to achieve self rotation, flowing water, and shaking effects,
- Rotating disk A: 7 types of glass patterns+white circles, pattern piece outer diameter 26.9mm, pattern piece inner diameter 21.5mm.(When cutting and imaging patterns, using pattern disc A yields better results).
- Rotating disk B: 7 types of glass patterns+white circles, pattern piece outer diameter 26.9mm, pattern piece inner diameter 21.5mm.
- Dynamic Effect Disk
- Eight way cutting: 4 gratings achieve fast and smooth cutting, and the eight cutting directions and angles can be individually controlled. Each single grating can achieve complete light closure, and the entire cutting module can rotate ± 55°.

EFFECT

- Octagonal prism, capable of bidirectional rotation.
- Heavy atomization+light atomization, can be independently switched and stacked.
- Equipped with electric aperture, 5-100% linear adjustment, with macro functions and multi effect changes.
- Electronic dimming, 0-100% linear dimming, uniform light spot.
- Electronic strobe speed is 1-25 times/second
- LED refresh rate: 1000Hz~25K Hz

CONTROL AND PROGRAMMING

- Control channels: 60CH, 35CH, 64CH, 49CH, see channel table for details
- Protocol: Standard DMX512 protocol, RDM protocol, Art-Net protocol, sACN protocol.
- Data connection: Three core or five core signal input/output
- Display: LCD screen

SOFTWARE

- Upgrade software through DMX signal or USB interface
- Silent fan, three working modes (silent/standard/high brightness)

X/Y-AXIS MOTION ANGLE

- X-axis: 540 ° 8-bit/16bit precision scanning
- Y-axis: 270 ° 8-bit/16bit precision scanning
- Reset function with automatic error correction
- Fixed lock: Y-axis lock

POWER

- Input voltage: AC 100-240V 50/60Hz
- Maximum power: 1050W (100V input)
- Power factor: 0.996
- Maximum current of the lamp: 10.5A (100V input)

SIZE AND WEIGHT

- Product size: 442 × 282 × 788mm
- N.W.: 37.5 kg
- Carton packaging (default): 660 × 560 × 740mm
  G.W.: 46.6 kg
- EPP-Flycase Size(1 unit): 700 × 700 × 880mm
- G.W.:75.1 kg

OTHER

- Protection level: IP20
- Working environment: -10 ℃~45℃
- Maximum surface temperature of lamp body:75℃
- Hook: Suitable for pipes with a diameter of 50-60 mm.

STANDARDS AND CERTIFICATION

- The product implementation standard: IEC 60598-1、IEC 60598-2-17
- Approved certifications: CE、RoHs
- The product complies with the following EU directives:
  Low Voltage Directive 2014/35/EU . EMC Directive 2014/30/EU

illumination diagram

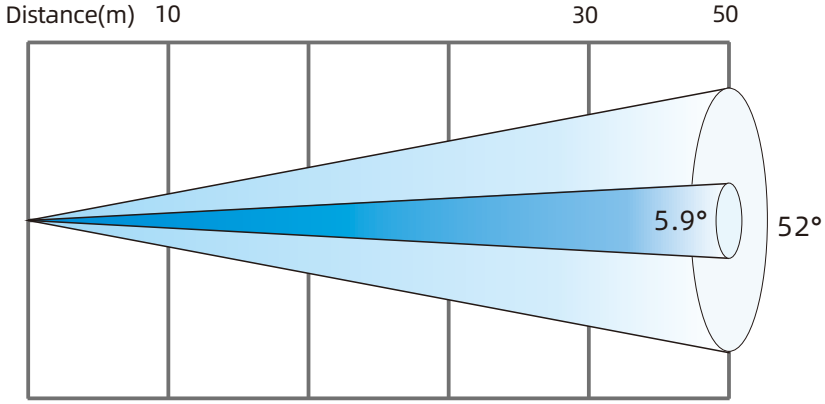

5.9° Lux R	720	320	180	80	30
G	2100	930	520	230	85
B	430	190	110	50	20
A	1580	700	400	180	60
L	8600	3800	2150	950	340
RGBAL	12500	5556	3125	1389	500
Diameter(m)	1.07	1.6	2.14	3.21	5.35
52° Lux R	20	9	5	2	1
G	50	22	13	6	2
B	10	4	3	1	0
A	36	16	9	4	1
L	200	89	50	22	8
RGBAL	300	130	75	30	12
Diameter(m)	9.82	14.73	19.64	29.46	49.1

2.1.Attachment And Size

Attachment contents-Fig.1

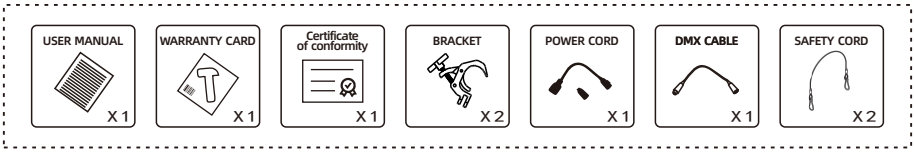

Size-Fig.2(Unit:mm)

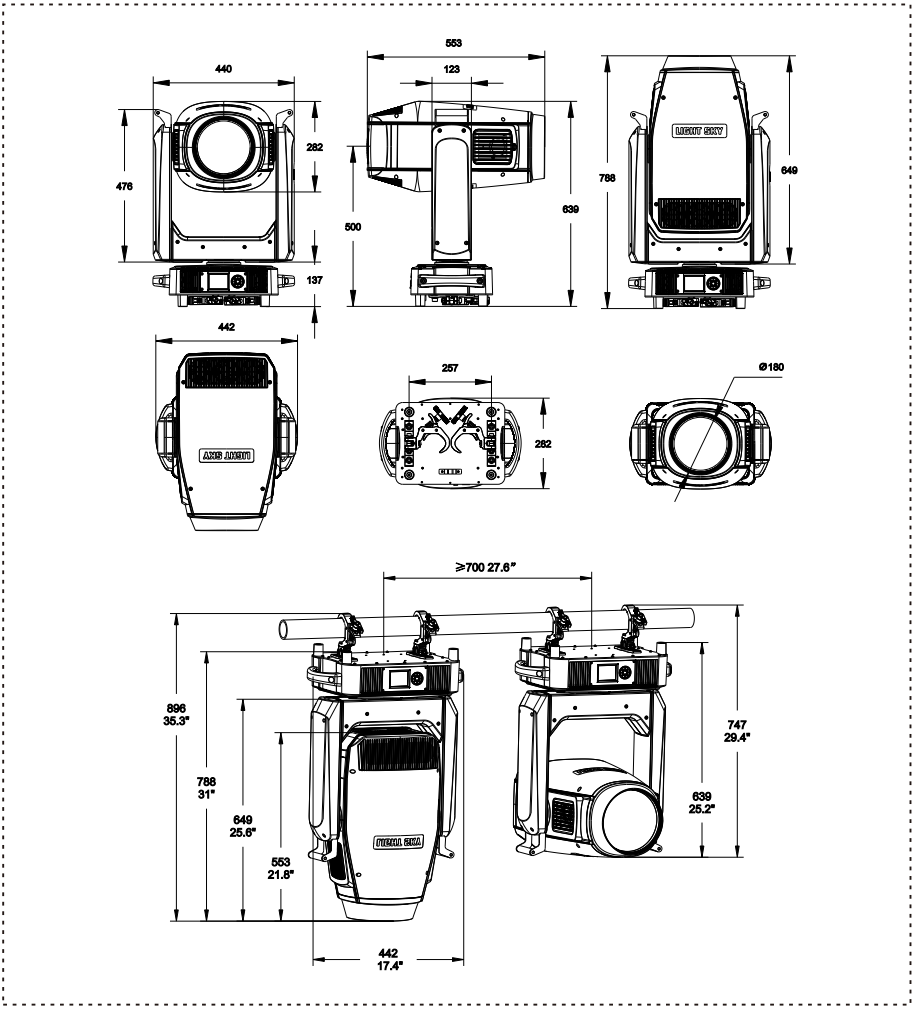

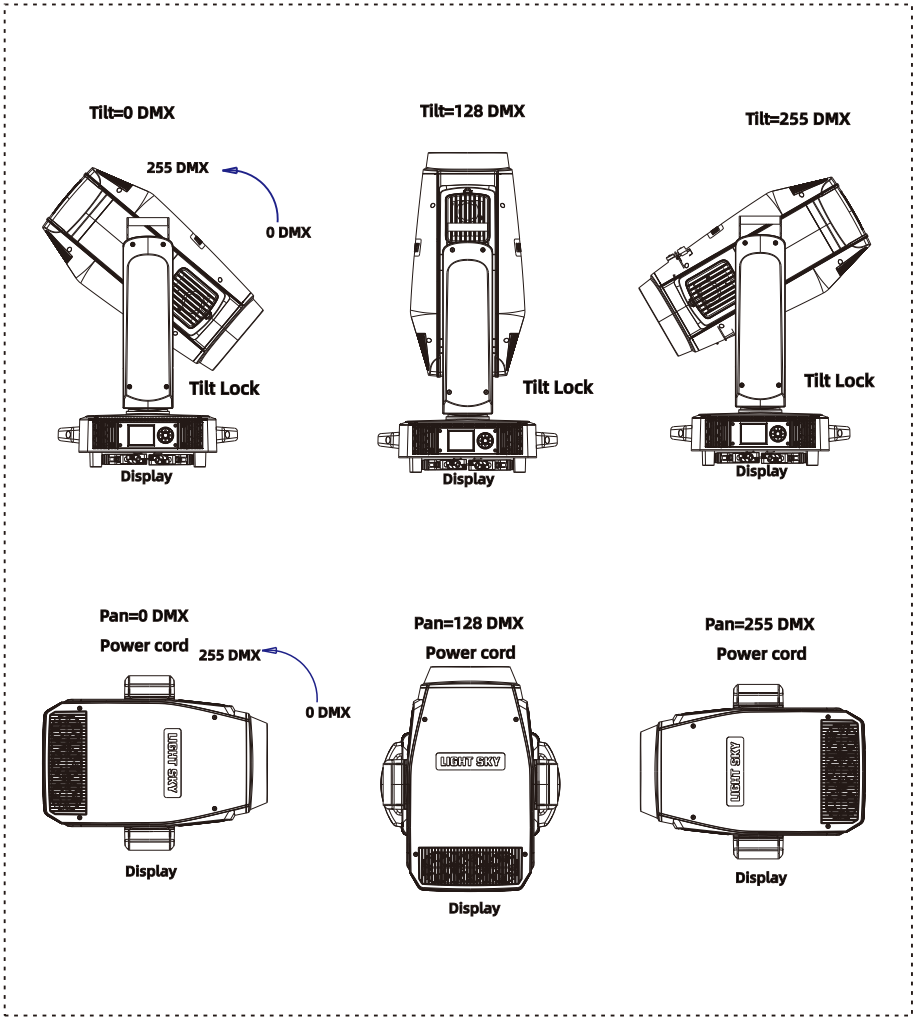
Tilt=0 DMX
255 DMX
0 DMX
Tilt Lock
Display
Tilt=128 DMX
Tilt Lock
Display
Tilt=255 DMX
Tilt Lock
Display
Pan=0 DMX
Power cord
255 DMX
0 DMX
LIGHT SKY
Display
Pan=128 DMX
Power cord
LIGHT SKY
Display
Pan=255 DMX
Power cord
LIGHT SKY
Display

3.Prism/CMY/Effect/Pattern

8 Prism

CMY+CTO

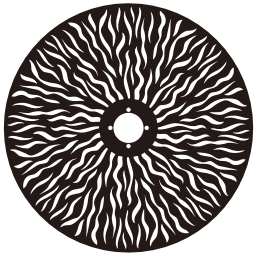

Effect wheel

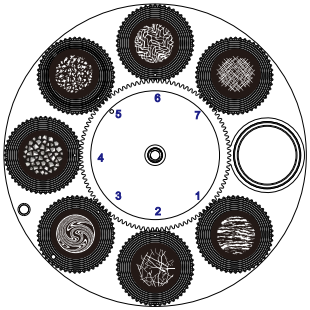

Rotating gobo wheel A

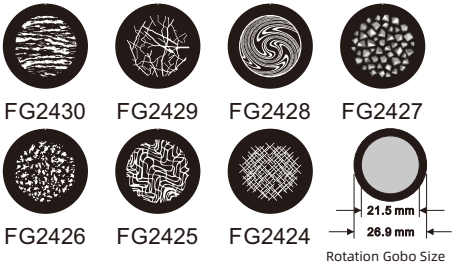

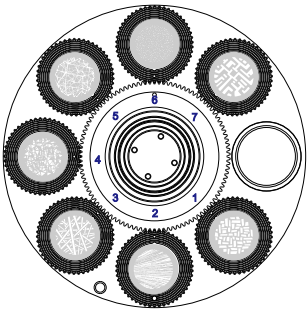

Rotating gobo wheel B

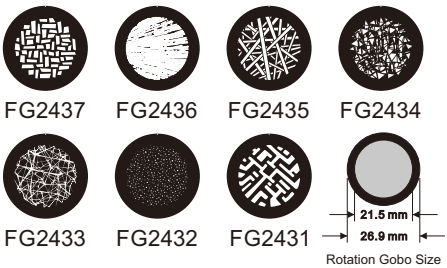

DANGER! Attention: When installing GOBO chips, it is necessary to strictly follow the order of the pictures and not change the original order and direction of the GOBO chips at will.Please disconnect the power supply when installing/replacing the rotating pattern piece!

3.1.Replacing Rotating Gobos

1.Use a screwdriver to unscrew the two screws at A to take out the pattern color module assembly;

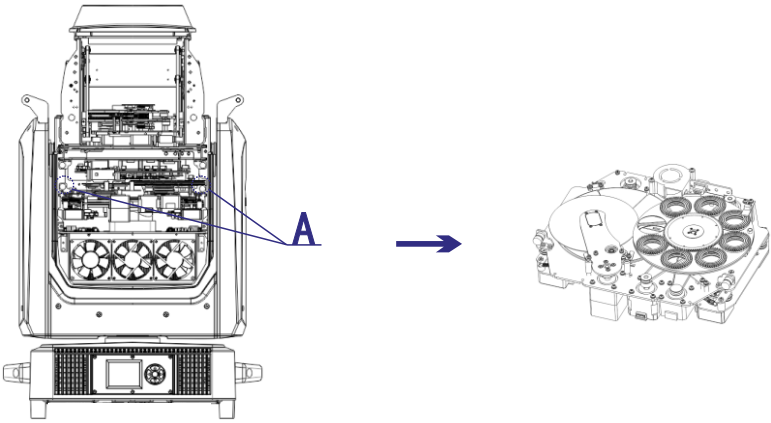

2. Reverse the assembly, and use a screwdriver to unscrew the four screws at B to separate the pattern color module from the CMY module;

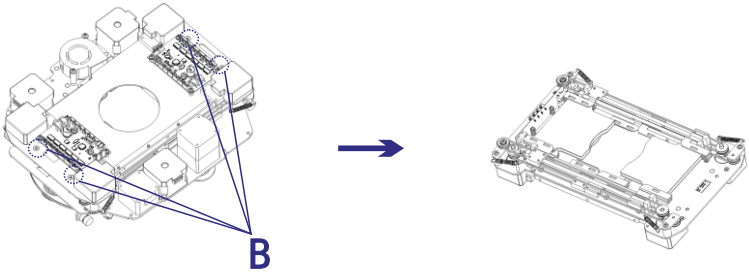

3. Use a screwdriver from the front of the pattern module to unscrew the two screws of the magnetic induction board at C, and remove the magnetic induction board; then half loosen the screws on the three motors at D, move the motor and take off the belt; turn the pattern module back Come here, unscrew the four screws at E with a screwdriver, and you can take out the rotating gobo and fixed gobo assembly (as shown in Figure F, the front is the rotating gobo, and the back is the fixed gobo).

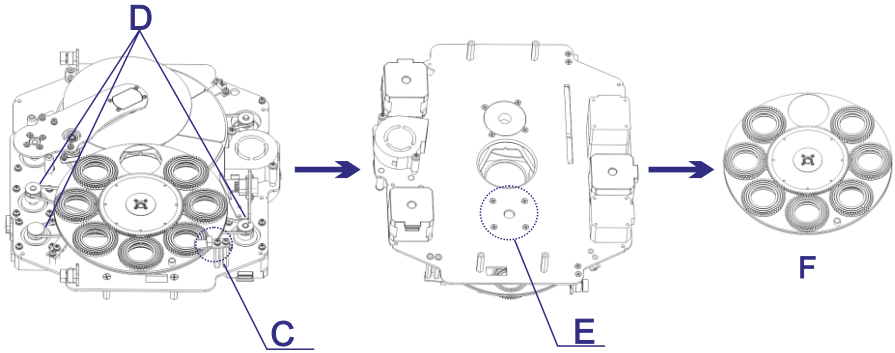

4.As shown in G, gently lift the gobo driven wheel from the edge upwards from the back of the gobo wheel and pull it out slowly to take out a single gobo;

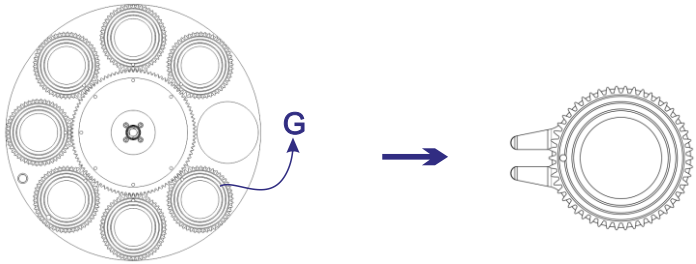

5.Take out the circlip at H with tweezers or other small objects that can be held (if the gobo is coated with glass glue for fixing, please use a professional cleaning agent to remove the glass glue and then take out the circlip to avoid damage to the gobo);

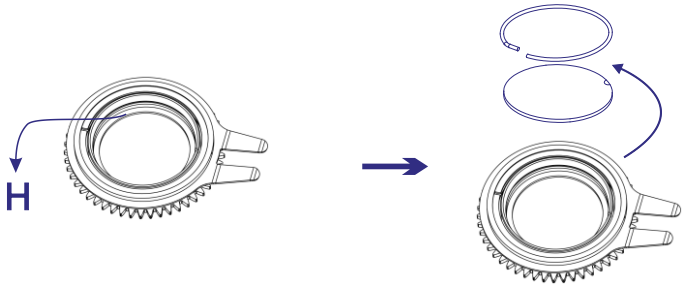

6.When assembling the gobo, avoid touching the gobo directly with your hands, and as shown in I, align the notched part of the gobo with the depression of the driven wheel assembly (the coating surface of the gobo should face the light source);

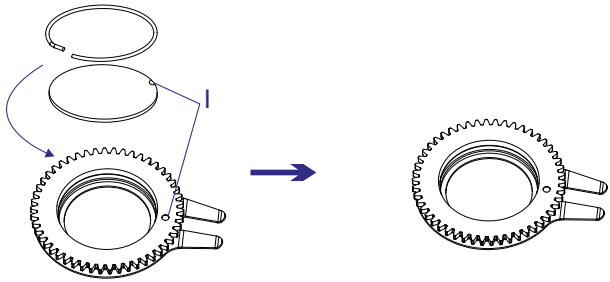

7. Insert the gobo driven wheel into the driving wheel assembly, as shown in J, the concave point of the gobo driven wheel must be positioned towards the center of the driving wheel;

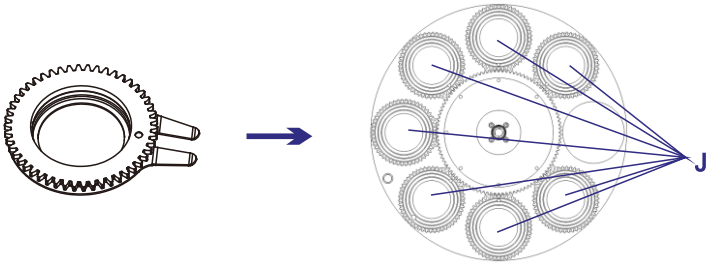

8.After installation, put the component back to the fixture.

4.Control Panel

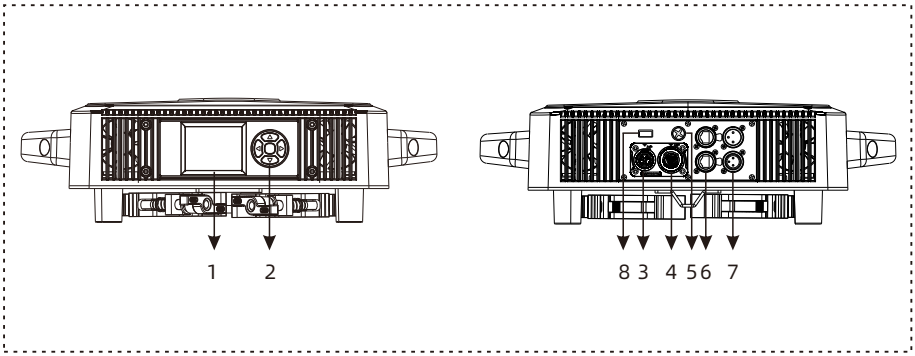

1.Display: To show the various menus and the selected function

2.Button:

●	OK confirmation key
▲	UP
▼	DOWN
◀	To the left
▶	To the right

3. Power input: Connect the power supply to provide power.

4. Power output: Connect the lamp power output adapter.

5.Fuse holder: Used for the bottom box battery pack power supply display board when not powered on.(Note: In the case of air transportation, the lighting fixtures will require disassembly of fuses for shipment, and they must be installed by themselves upon receipt.)

6.Art-net: The information of the lamp can be transmitted to the main controllerthrough the network cable, and the lamp can be controlled through RJ45(optional).

7.DMX inputl/output: Used for DMX512 connection, use 3/5 core XLR signal cable toconnect console and lamps,And input/output DMX signal.

8. USB port: used for updating software versions.

5.Connection and control

5.1.Power supply connection

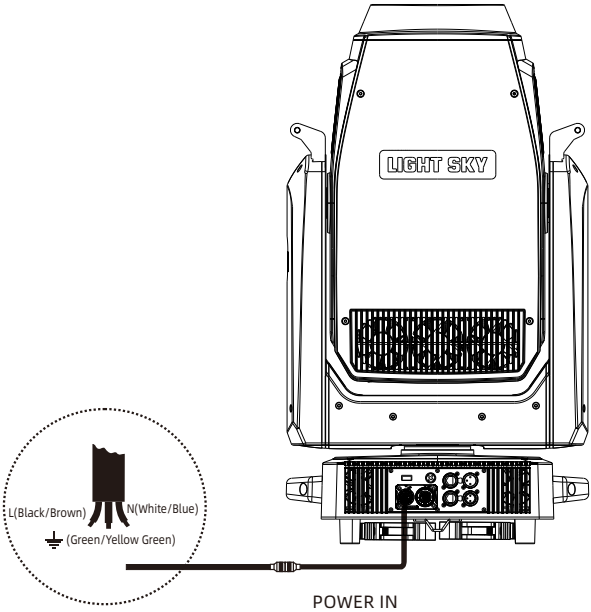

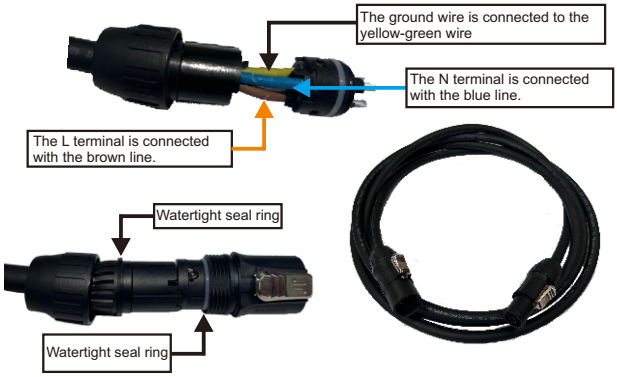

- The bus connecting the power supply must be installed by a qualified professional technician.
- After completing all the above operations and ensuring that it is installed, you can power on the lamp to operate.

5.2.DMX 512 Connection

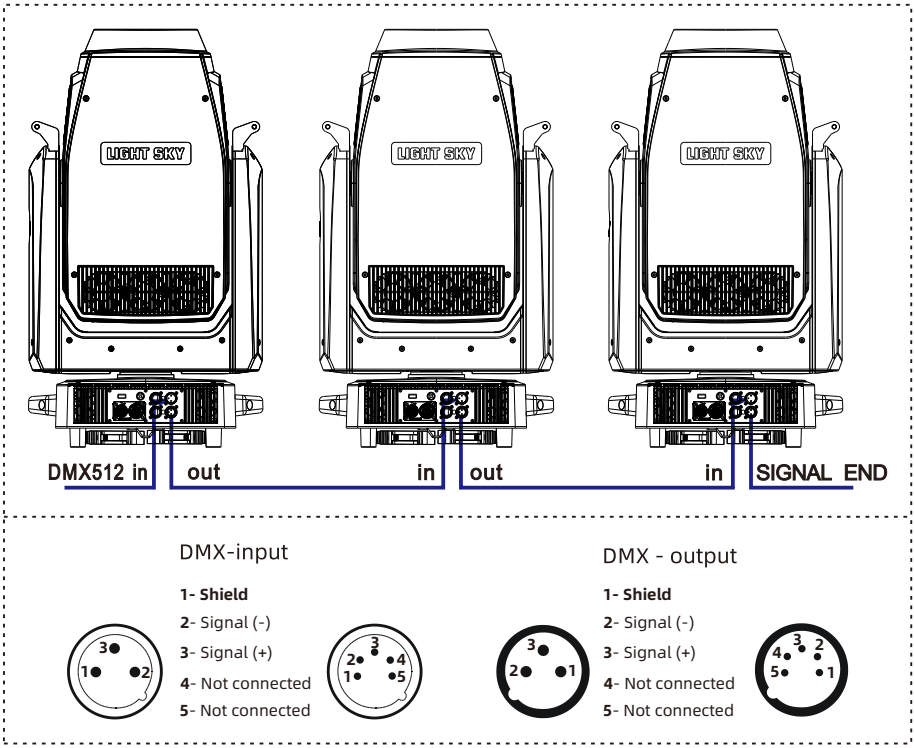

1. At last unit, the DMX cable has to be terminated with a terminator. Solder a 120 Ω 1/4W resistor between pin 2(DMX-) and pin 3(DMX+) into a 3-pin XLR-plug and plug it in the DMX-output of the last unit.
2. Connect the unit together in a "daisy chain" by XLR plug cable from the output of the unit to the input of the next unit. The cable cannot be branched or split to a "Y" cable. DMX 512 is a very high-speed signal. Inadequate or damaged cables, soldered joints or corroded connectors can easily distort the signal and shut down the system.
3. The DMX output and input connectors are pass-through to maintain the DMX circuit, when one of the units' power is disconnected.
4. Each lighting unit needs to have a DMX address to receive the data by the controller. The address number is between 1-512.
5. The end of the DMX 512 system should be terminated to reduce signal errors.
6. 3 pin XLR connectors are more popular than 5 pins XLR.
3 pin XLR: Pin 1: GND, Pin 2: Negative signal (-), Pin 3: Positive signal (+)
5 pin XLR: Pin 1: GND, Pin 2: Negative signal (-), Pin 3: Positive signal (+), Pin4, Pin5 not used.

6.How To Set The Unit

6.1.Main Function

Main menu		I menu		II menu		III menu		IV menu
DMX SETTING	→	Address	→	1-512				
		Channel mode	→	Standard（60）				
				Basic(35)				
				Extended(64)				
				Compatible(49)				
		Dmx state	→	Black				
				Hold				
		Input mode	→	DMX 512				
				Art-Net				
				sACN				
Info	→	Fixture times	→	Power on time		0 - 99999H		
				LED on time		0 - 99999H		
				All time		0 - 99999H		
		Temperatures	→	LED TEMP		XXXX℃		
				Drive TEMP		XXXX℃		
		RDM info	→	UID:0x3888XXXXXXXX				
		DMX live	→	1.Pan		0 - 255		
				2.Pan fine	→	0 - 255		
				3.....		0 - 255		
		Version info	→	Display		VX.XXX		
				Pan/Tilt		VX.XXX		
				Gobo module		VX.XXX		
				Profile1	→	VX.XXX		
				Profile2		VX.XXX		
				Zoom module		VX.XXX		
				LedFanDrv		VX.XXX		
		Fan Info		InFan		xxx V		
				OutFan		xxx V		
				GoboFan		xxx V		
				ProfileFan		xxx V		
				FocusFan		xxx V		
				InFan1		OK/Error		
				InFan2		OK/Error		
				InFan3	→	OK/Error		
				OutFan1		OK/Error		
				OutFan2		OK/Error		
				OutFan3		OK/Error		
				GoboFan		OK/Error		
				ProfileFan		OK/Error		
				FocusFan1		OK/Error		
				FocusFan2		OK/Error		
Person	→	Tilt /Pan	→	PT swap	→	OFF/ON		
				Pan invert	→	OFF/ON		
				Tilt invert	→	OFF/ON		
				PT Encoder	→	OFF/ON		
				PT Mode	→	Speed		
						Time		
				Black on Move	→	OFF/ON		
				PT Follow Spot	→	OFF		
						Soft		
						Medium		
						Hard		
				PT Parking	→	OFF/ON		
		Noise mode	→	Silent				
				Standard				
				High Output				
		Display	→	Language	→	English		
						Chinese		
				Backlight time	→	Always		
						Auto (30S)		
				Intensity	→	0 - 100		
				Rotation	→	Normal		
						Rotate 180		
						Auto		
		Ethernet Set		IP Address		xxx.xxx.xxx.xxx		
				Mask Address		xxx.xxx.xxx.xxx		
				Universe Address		0-32767		
				sACN Universe Add		1-63999		
				DHCP		OFF/ON		
				Ethernet To DMX		OFF/ON		
		Dimmer Curve	→	Linear				
				Square(Default)				
				Inv.Square				
				S-Curve				

Main menu		I menu		II menu		III menu		IV menu
Manual	→	LED Prequency	→	4000 Hz				
				8000 Hz				
				16000 Hz				
				25000 Hz				
		Invert Zoom	→	OFF/ON				
		Color Mixing Mode	→	CMY				
				RGB				
		Tungsten Effect	→	OFF				
				750W/80V				
				1000W/240V				
				1200W/240V				
				2000W/230V				
				2500W/230V				
		Light Out Stab.	→	OFF/ON				
		FX Auto Focus	→	OFF/ON				
		iCC	→	OFF/ON				
		Manual Control	→	1.Pan		0 - 255		
				2.Pan fine	→	0 - 255		
				3.....		0 - 255		
		Reset	→	Reset All				
				Pan/Tilt				
				Gobo				
				Profile				
				Focus				
				Effect				
Test	→	Test all		Testing				
		Test pan/tilt	→	Testing				
		Test effects		Testing				
		Fixture state	→	Memory IC		OK/Reset/Error		
				Angle Sensor		OK/Reset/Error		
				Pan Encodeer		OK/Reset/Error		
				Tilt Encoder		OK/Reset/Error		
				Pan		OK/Reset/Error		
				Tilt		OK/Reset/Error		
				Gobo1		OK/Reset/Error		
				Gobo1 Rot.	→	OK/Reset/Error		
				Gobo2		OK/Reset/Error		
				Gobo2 Rot.		OK/Reset/Error		
				Fram Rot.		OK/Reset/Error		
				Zoom		OK/Reset/Error		
				Focus		OK/Reset/Error		
				Prism		OK/Reset/Error		
				Prism Rot.		OK/Reset/Error		
		Adjust	→	Pan		0 - 255		
				Tilt		0 - 255		
				Red		0 - 255		
				Green		0 - 255		
				Blue		0 - 255		
				Amber		0 - 255		
				LightGreen		0 - 255		
				Gobo1		0 - 255		
				Gobo1 Rot.		0 - 255		
				Gobo2		0 - 255		
				Gobo2 Rot.		0 - 255		
				Blade 1A		0 - 255		
				Blade 1B		0 - 255		
				Blade 2A		0 - 255		
				Blade 2B		0 - 255		
				Blade 3A		0 - 255		
				Blade 3B	→	0 - 255		
				Blade 4A		0 - 255		
				Blade 4B		0 - 255		
				FramingRot.		0 - 255		
				Prism		0 - 255		
				Prism Rot.		0 - 255		
				Effect		0 - 255		
				Light Frost		0 - 255		
				Medium Frost		0 - 255		
				Iris		0 - 255		
				Zoom		0 - 255		
				Focus		0 - 255		
				Dimmer		0 - 255		
				FosForGo1		0 - 255		
				FosForGo2		0 - 255		
				FosForIris		0 - 255		
				FosForEffect		0 - 255		

Main menu		I menu		II menu		III menu		IV menu
Service	→	Color Calibration	→	Filter4	→	Red(xxx)	→	0-255
						Green(xxx)		0-255
						Blue(xxx)		0-255
						Amber(xxx)		0-255
						LightGreen(xxx)		0-255
				Filter10	→	Red(xxx)	→	0-255
						Green(xxx)		0-255
						Blue(xxx)		0-255
						Amber(xxx)		0-255
						LightGreen(xxx)		0-255
				Filter19	→	Red(xxx)	→	0-255
						Green(xxx)		0-255
						Blue(xxx)		0-255
						Amber(xxx)		0-255
						LightGreen(xxx)		0-255
				.....				
				Filter778	→	Red(xxx)	→	0-255
						Green(xxx)		0-255
						Blue(xxx)		0-255
						Amber(xxx)		0-255
						LightGreen(xxx)		0-255
				Filter793	→	Red(xxx)	→	0-255
						Green(xxx)		0-255
						Blue(xxx)		0-255
						Amber(xxx)		0-255
						LightGreen(xxx)		0-255
		CTO Calibration	→	10000K	→	Red(xxx)	→	0-255
						Green(xxx)		0-255
						Blue(xxx)		0-255
						Amber(xxx)		0-255
						LightGreen(xxx)		0-255
				9500K	→	Red(xxx)	→	0-255
						Green(xxx)		0-255
						Blue(xxx)		0-255
						Amber(xxx)		0-255
						LightGreen(xxx)		0-255
				9000K	→	Red(xxx)	→	0-255
						Green(xxx)		0-255
						Blue(xxx)		0-255
						Amber(xxx)		0-255
						LightGreen(xxx)		0-255
				.....				
				2700K	→	Red(xxx)	→	0-255
						Green(xxx)		0-255
						Blue(xxx)		0-255
						Amber(xxx)		0-255
						LightGreen(xxx)		0-255
				2500K	→	Red(xxx)	→	0-255
						Green(xxx)		0-255
						Blue(xxx)		0-255
						Amber(xxx)		0-255
						LightGreen(xxx)		0-255
		Factory		Factory Reset		YES /NO	→	
				Reset timers		Reset power on timers		YES/NO
						Reset LED timers	→	YES/NO
						Reset all timers		YES/NO
				Update		Simple update/ Whole update		Display
								Pan/Tilt
								Gobo module
								Framing module1
								Framing module2
								Zoom module
								LEDQD
								ALL
				Power Select				
				Logo Select				
				Fixture Type				
				Framing Adjust Mode		OFF/ON		
				ICC Test		OFF/ON		

6.2.Channel Setting

Press the OK button to confirm, use the up/down buttons to select the channel mode: mode 1 (60CH), mode 2 (35CH), mode 3 (64CH), mode 4 (49CH),press the OK button to save. Press the left/right button to return to the previous menu.

6.3.Address Setting

When using a universal DMX controller to control the fixture, you need to set the starting address (1-512) for the fixture so that the machine can receiveto the DMX signal.Select the DMX address, press the OK button to confirm, the current DMX address will be shown on the display. Use the left/right buttons to select 001~512 address, press the OK button to save. Press the left/right button to return to the previous menu.

Please refer to the following diagram to address your DMX512 channel for the first 4 units.

Channel mode	Unit 1 Address	Unit 2 Address	Unit 3 Address	Unit 4 Address
60 Channel	1	61	121	181
35 Channel	1	36	71	106
64 Channel	1	65	129	193
49 Channel	1	50	99	148

6.4.DMX 512 Configuration

60 Channel	35 Channel	64 Channel	49 Channel	DMX	Function	Note
1	1	1	1	0-255	**Pan** Pan movement/positioning	Angle：0-540° Maximum:3.65S
2	2	2	2	0-255	**Pan fine** Fine pan positioning	
3	3	3	3	0-255	**TILT** Tilt movement/positioning	Angle：0-270° Maximum:2.28S
4	4	4	4	0-255	**TILT fine** Fine tilt movement/positioning	
5	5	5	5	0 1 2-255 2-255	**PAN/TILT Speed, Pan/Tilt time** Standard mode (0=default) Max. Speed Mode **Pan/Tilt speed mode** Speed from max. to min. **Pan/Tilt time mode** Time from 0.2 sec. to 25.5 sec.	
6	6	6	6	0-9 10-14 15-19 20-24 25-29 30-34 35-39 40-44 45-49 50-54 55-59 60-64 65-69 70-74 75-79 80-84 85-89 90-94 95-99 100-104 105-119 120-124 125-129 130-139 140-149 150-159 160-169 170-179 180-189 190-199 200-209 210-211 212-213 214-215 216-218 219-220 221-222 223-224 225-229 230-234 235-239 240 241-255	**Functions** **To activate following functions, stop in DMX value for at least 3s** Reserved (0=default) DMX input: DMX DMX input:Art-Net Display Back light is on Display Back light is auto(Default) Zoom Invert Zoom Forward(Default) Pan/Tilt mode: Speed(Default) Pan/Tilt mode: Time Blackout while pan/tilt moving: On Blackout while pan/tilt moving: Off (Default) Reserved Reserved Fan mode:Silent Fan mode:Standard (Default) Fan mode:High Output DMX state: Black (Default) DMX state: Hold iCC off iCC on (Default) Reserved Parking position on Parking position off (Default) Fixture reset(except pan/tilt) Pan/Tilt reset Reserved Gobo wheels/effect wheel reset Reserved Zoom/focus/frosts/prisms reset Iris /framing shutters reset Total fixture reset Green correction calibration FX Auto Focus on FX Auto Focus off Reserved **The following three commands define transition from gobo rotation to gobo indexing:** Maximum speed and shortcut (Use in future,now no function) Follow speed and direction (Use in future,now no function) Maximum speed and follow direction (Use in future,now no function) **The following RoboSpot related commands are only applicable when the RoboSpot is connected:(Use in future,now no function)** RoboSpot enabled(Use in future,now no function) **RoboSpot disabled - except handle faders and pan/tilt(Use in future,now no function)** RoboSpot fully disabled (Use in future,now no function) Disabled "Quiet mode" Quiet mode - fan noise control from min. to max.	
7	/	7	7	0-4 5-9 10-14 15-19 20-24 25-255	**LED frequency selection** **Factory display menu setting: 8000Hz** **Select PWM output frequency of LEDs. Selected PWM frequency can be fine adjusted in 127 steps up/down around selected PWM frequency on the channel below. Corresponding menu item (Frequency Setup) is temporarily overriden.** PWM frequency from Display menu (fixture utilizes PWM frequency set in the display menu item Frequency Setup). 4000 Hz 8000 Hz (10=default) 16000 Hz 25000 Hz Reserved (fixture utilizes PWM frequency set in the display menu item	

60 Channel	35 Channel	64 Channel	49 Channel	DMX	Function	Note
					LED frequency fine adjusting **Factory display menu setting: 8000Hz** **Select desired PWM output frequency of LEDs on the channel above.**	
				0-1	Selected LED Frequency	
				2	LED Frequency (step -126)	
				3	LED Frequency (step -125)	
				4	LED Frequency (step -124)	
				5	LED Frequency (step -123)	
				6	LED Frequency (step -122)	
				7	LED Frequency (step -121)	
				8	LED Frequency (step -120)	
				9	LED Frequency (step -119)	
				10	LED Frequency (step -118)	
				11	LED Frequency (step -117)	
				12	LED Frequency (step -116)	
				13	LED Frequency (step -115)	
				14	LED Frequency (step -114)	
				15	LED Frequency (step -113)	
				16	LED Frequency (step -112)	
				17	LED Frequency (step -111)	
				18	LED Frequency (step -110)	
				19	LED Frequency (step -109)	
				20	LED Frequency (step -108)	
				21	LED Frequency (step -107)	
				22	LED Frequency (step -106)	
				23	LED Frequency (step -105)	
				24	LED Frequency (step -104)	
				25	LED Frequency (step -103)	
				26	LED Frequency (step -102)	
				27	LED Frequency (step -101)	
				28	LED Frequency (step -100)	
				29	LED Frequency (step -99)	
				30	LED Frequency (step -98)	
				31	LED Frequency (step -97)	
				32	LED Frequency (step -96)	
				33	LED Frequency (step -95)	
				34	LED Frequency (step -94)	
				35	LED Frequency (step -93)	
				36	LED Frequency (step -92)	
				37	LED Frequency (step -91)	
				38	LED Frequency (step -90)	
				39	LED Frequency (step -89)	
				40	LED Frequency (step -88)	
				41	LED Frequency (step -87)	
				42	LED Frequency (step -86)	
				43	LED Frequency (step -85)	
				44	LED Frequency (step -84)	
				45	LED Frequency (step -83)	
				46	LED Frequency (step -82)	
				47	LED Frequency (step -81)	
				48	LED Frequency (step -80)	
				49	LED Frequency (step -79)	
				50	LED Frequency (step -78)	
				51	LED Frequency (step -77)	
				52	LED Frequency (step -76)	
				53	LED Frequency (step -75)	
				54	LED Frequency (step -74)	
				55	LED Frequency (step -73)	
				56	LED Frequency (step -72)	
				57	LED Frequency (step -71)	
				58	LED Frequency (step -70)	
				59	LED Frequency (step -69)	
				60	LED Frequency (step -68)	
				61	LED Frequency (step -67)	
				62	LED Frequency (step -66)	
				63	LED Frequency (step -65)	
				64	LED Frequency (step -64)	
				65	LED Frequency (step -63)	
				66	LED Frequency (step -62)	
				67	LED Frequency (step -61)	
				68	LED Frequency (step -60)	
				69	LED Frequency (step -59)	
				70	LED Frequency (step -58)	
				71	LED Frequency (step -57)	
				72	LED Frequency (step -56)	
				73	LED Frequency (step -55)	
				74	LED Frequency (step -54)	
				75	LED Frequency (step -53)	

60 Channel	35 Channel	64 Channel	49 Channel	DMX	Function	Note
				76	LED Frequency (step -52)	
				77	LED Frequency (step -51)	
				78	LED Frequency (step -50)	
				79	LED Frequency (step -49)	
				80	LED Frequency (step -48)	
				81	LED Frequency (step -47)	
				82	LED Frequency (step -46)	
				83	LED Frequency (step -45)	
				84	LED Frequency (step -44)	
				85	LED Frequency (step -43)	
				86	LED Frequency (step -42)	
				87	LED Frequency (step -41)	
				88	LED Frequency (step -40)	
				89	LED Frequency (step -39)	
				90	LED Frequency (step -38)	
				91	LED Frequency (step -37)	
				92	LED Frequency (step -36)	
				93	LED Frequency (step -35)	
				94	LED Frequency (step -34)	
				95	LED Frequency (step -33)	
				96	LED Frequency (step -32)	
				97	LED Frequency (step -31)	
				98	LED Frequency (step -30)	
				99	LED Frequency (step -29)	
				100	LED Frequency (step -28)	
				101	LED Frequency (step -27)	
				102	LED Frequency (step -26)	
				103	LED Frequency (step -25)	
				104	LED Frequency (step -24)	
				105	LED Frequency (step -23)	
				106	LED Frequency (step -22)	
				107	LED Frequency (step -21)	
				108	LED Frequency (step -20)	
				109	LED Frequency (step -19)	
				110	LED Frequency (step -18)	
				111	LED Frequency (step -17)	
				112	LED Frequency (step -16)	
				113	LED Frequency (step -15)	
				114	LED Frequency (step -14)	
				115	LED Frequency (step -13)	
				116	LED Frequency (step -12)	
				117	LED Frequency (step -11)	
				118	LED Frequency (step -10)	
				119	LED Frequency (step -9)	
				120	LED Frequency (step -8)	
				121	LED Frequency (step -7)	
				122	LED Frequency (step -6)	
				123	LED Frequency (step -5)	
				124	LED Frequency (step -4)	
				125	LED Frequency (step -3)	
8	/	8	8	126	LED Frequency (step -2)	
				127	LED Frequency (step -1)	
				128	Selected LED Frequency (128=default)	
				129	LED Frequency (step +1)	
				130	LED Frequency (step +2)	
				131	LED Frequency (step +3)	
				132	LED Frequency (step +4)	
				133	LED Frequency (step +5)	
				134	LED Frequency (step +6)	
				135	LED Frequency (step +7)	
				136	LED Frequency (step +8)	
				137	LED Frequency (step +9)	
				138	LED Frequency (step +10)	
				139	LED Frequency (step +11)	
				140	LED Frequency (step +12)	
				141	LED Frequency (step +13)	
				142	LED Frequency (step +14)	
				143	LED Frequency (step +15)	
				144	LED Frequency (step +16)	
				145	LED Frequency (step +17)	
				146	LED Frequency (step +18)	
				147	LED Frequency (step +19)	
				148	LED Frequency (step +20)	
				149	LED Frequency (step +21)	
				150	LED Frequency (step +22)	
				151	LED Frequency (step +23)	
				152	LED Frequency (step +24)	
				153	LED Frequency (step +25)	
				154	LED Frequency (step +26)	

60 Channel	35 Channel	64 Channel	49 Channel	DMX	Function	Note
				155	LED Frequency (step +27)	
				156	LED Frequency (step +28)	
				157	LED Frequency (step +29)	
				158	LED Frequency (step +30)	
				159	LED Frequency (step +31)	
				160	LED Frequency (step +32)	
				161	LED Frequency (step +33)	
				162	LED Frequency (step +34)	
				163	LED Frequency (step +35)	
				164	LED Frequency (step +36)	
				165	LED Frequency (step +37)	
				166	LED Frequency (step +38)	
				167	LED Frequency (step +39)	
				168	LED Frequency (step +40)	
				169	LED Frequency (step +41)	
				170	LED Frequency (step +42)	
				171	LED Frequency (step +43)	
				172	LED Frequency (step +44)	
				173	LED Frequency (step +45)	
				174	LED Frequency (step +46)	
				175	LED Frequency (step +47)	
				176	LED Frequency (step +48)	
				177	LED Frequency (step +49)	
				178	LED Frequency (step +50)	
				179	LED Frequency (step +51)	
				180	LED Frequency (step +52)	
				181	LED Frequency (step +53)	
				182	LED Frequency (step +54)	
				183	LED Frequency (step +55)	
				184	LED Frequency (step +56)	
				185	LED Frequency (step +57)	
				186	LED Frequency (step +58)	
				187	LED Frequency (step +59)	
				188	LED Frequency (step +60)	
				189	LED Frequency (step +61)	
				190	LED Frequency (step +62)	
				191	LED Frequency (step +63)	
				192	LED Frequency (step +64)	
				193	LED Frequency (step +65)	
				194	LED Frequency (step +66)	
				195	LED Frequency (step +67)	
				196	LED Frequency (step +68)	
				197	LED Frequency (step +69)	
				198	LED Frequency (step +70)	
				199	LED Frequency (step +71)	
				200	LED Frequency (step +72)	
				201	LED Frequency (step +73)	
				202	LED Frequency (step +74)	
				203	LED Frequency (step +75)	
				204	LED Frequency (step +76)	
				205	LED Frequency (step +77)	
				206	LED Frequency (step +78)	
				207	LED Frequency (step +79)	
				208	LED Frequency (step +80)	
				209	LED Frequency (step +81)	
				210	LED Frequency (step +82)	
				211	LED Frequency (step +83)	
				212	LED Frequency (step +84)	
				213	LED Frequency (step +85)	
				214	LED Frequency (step +86)	
				215	LED Frequency (step +87)	
				216	LED Frequency (step +88)	
				217	LED Frequency (step +89)	
				218	LED Frequency (step +90)	
				219	LED Frequency (step +91)	
				220	LED Frequency (step +92)	
				221	LED Frequency (step +93)	
				222	LED Frequency (step +94)	
				223	LED Frequency (step +95)	
				224	LED Frequency (step +96)	
				225	LED Frequency (step +97)	
				226	LED Frequency (step +98)	
				227	LED Frequency (step +99)	
				228	LED Frequency (step +100)	
				229	LED Frequency (step +101)	
				230	LED Frequency (step +102)	
				231	LED Frequency (step +103)	
				232	LED Frequency (step +104)	
				233	LED Frequency (step +105)	

60 Channel	35 Channel	64 Channel	49 Channel	DMX	Function	Note
				234	LED Frequency (step +106)	
				235	LED Frequency (step +107)	
				236	LED Frequency (step +108)	
				237	LED Frequency (step +109)	
				238	LED Frequency (step +110)	
				239	LED Frequency (step +111)	
				240	LED Frequency (step +112)	
				241	LED Frequency (step +113)	
				242	LED Frequency (step +114)	
				243	LED Frequency (step +115)	
				244	LED Frequency (step +116)	
				245	LED Frequency (step +117)	
				246	LED Frequency (step +118)	
				247	LED Frequency (step +119)	
				248	LED Frequency (step +120)	
				249	LED Frequency (step +121)	
				250	LED Frequency (step +122)	
				251	LED Frequency (step +123)	
				252	LED Frequency (step +124)	
				253	LED Frequency (step +125)	
				254	LED Frequency (step +126)	
				255	Selected LED Frequency	
9	7	9	9		**Colour functions**	
					Factory display menu setting: Colour mixing mode-CMY, Dimmer Curve-Square Law, Tungsten effect simulation -Off, Chromatic white-Off, Light output stability -Off, Uniformity -Off	
				0	No function (0=default)	
					To activate following functions, stop in DMX value for at least 3 seconds.Corresponding menu items are temporarily overriden	
				1-39	Reserved	
				40-44	Colour mixing mode: CMY (DMX Standard, Basic and Compatible Mode only)	
				45-49	Colour mixing mode: RGB (DMX Standard, Basic and Compatible Mode), RGBAL (DMX Extended Mode only)	
				50-54	Dimmer curve: Square law	
				55-59	Dimmer curve: Linear	
				60-64	Dimmer curve: I-Square law	
				65-69	Dimmer curve: S Curve	
				70-79	Raw DMX	
					Tungsten effect simulation for whites 2700K-4200K only:	
				80-84	Tungsten effect simulation (750W/80V): On	
				85-89	Tungsten effect simulation (1000W/240V): On	
				90-94	Tungsten effect simulation (1200W/240V): On	
				95-99	Tungsten effect simulation (2000W/230V): On	
				100-104	Tungsten effect simulation (2500W/230V): On	
				105-109	Tungsten effect simulation: Off	
				110-114	Reserved	
				115-119	Chromatic white: On (Use in future,now no function)	
				120-124	Chromatic white: Off (Use in future,now no function)	
				125-129	Light output stability On	
				130-134	Light output stability Off	
				135-139	Uniformity On (Use in future,now no function)	
				140-144	Uniformity Off (Use in future,now no function)	
				145-149	Reserved	
				150-154	Reserved	
				155-159	Reserved	
				160-164	Reserved	
				165-169	Reserved	
				170-174	Reserved	
				175-179	Reserved	
				180-184	Reserved	
				185-189	Reserved	
				190-194	Reserved	
				195-199	Reserved	
				200-204	Colour Contribution Index On	
				205-209	Colour Contribution Index Off	
				210-255	Reserved	
10	8	10	10		**CRI selection**	
				0-255	CRI selection from Standard(CRI90+/R9:95+) to High light (CRI90+/R9:80) (0=default)	
					Virtual Colour wheel (Use in Standard Mode 60CH and Extended Mode 64CH)	
				0	No function	
				1-2	Filter 4 (Medium Bastard Amber)	
				3-4	Filter 10 (Medium Yellow)	
				5-6	Filter 19 (Fire)	
				7-8	Filter 26 (Bright Red)	
				9-10	Filter 58 (Lavender)	

60 Channel	35 Channel	64 Channel	49 Channel	DMX	Function	Note
				11-12	Filter 68 (Sky Blue)	
				13-14	Filter 71 (Tokyo Blue)	
				15-16	Filter 79 (Just Blue)	
				17-18	Filter 88 (Lime Green)	
				19-20	Filter 90 (Dark Yellow Green)	
				21-22	Filter 100 (Spring Yellow)	
				23-24	Filter 101 (Yellow)	
				25-26	Filter 102 (Light Amber)	
				27-28	Filter 103 (Straw)	
				29-30	Filter 104 (Deep Amber)	
				31-32	Filter 105 (Orange)	
				33-34	Filter 106 (Primary Red)	
				35-36	Filter 111 (Dark Pink)	
				37-38	Filter 115 (Peacock Blue)	
				39-40	Filter 116 (Medium Blue-Green)	
				41-42	Filter 117 (Steel Blue)	
				43-44	Filter 118 (Light Blue)	
				45-46	Filter 119 (Dark Blue)	
				47-48	Filter 120 (Deep Blue)	
				49-50	Filter 121 (Filter Green)	
				51-52	Filter 128 (Bright Pink)	
				53-54	Filter 131 (Marine Blue)	
				55-56	Filter 132 (Medium Blue)	
				57-58	Filter 134 (Golden Amber)	
				59-60	Filter 135 (Deep Golden Amber)	
				61-62	Filter 136 (Pale Lavender)	
				63-64	Filter 137 (Special Lavender)	
				65-66	Filter 138 (Pale Green)	
				67-68	Filter 139 (Primary Green)	
				69-70	Filter 141 (Bright Blue)	
				71-72	Filter 147 (Apricot)	
				73-74	Filter 148 (Bright Rose)	
				75-76	Filter 152 (Pale Gold)	
				77-78	Filter 154 (Pale Rose)	
				79-80	Filter 157 (Pink)	
				81-82	Filter 158 (Deep Orange)	
				83-84	Filter 162 (Bastard Amber)	
				85-86	Filter 164 (Flame Red)	
				87-88	Filter 165 (Daylight Blue)	
				89-90	Filter 169 (Lilac Tint)	
				91-92	Filter 170 (Deep Lavender)	
				93-94	Filter 172 (Lagoon Blue)	
				95-96	Filter 179 (Chrome Orange)	
				97-98	Filter 180 (Dark Lavender)	
				99-100	Filter 181 (Congo Blue)	
				101-102	Filter 197 (Alice Blue)	
				103-104	Filter 201 (Full C.T. Blue)	
				105-106	Filter 202 (Half C.T. Blue)	
				107-108	Filter 203 (Quarter C.T. Blue)	
				109-110	Filter 204 (Full C.T. Orange)	
				111-112	Filter 205 (Half C.T. Orange)	
				113-114	Filter 206 (Quarter C.T. Orange)	
				115-116	Filter 247 (Filter Minus Green)	
				117-118	Filter 248 (Half Minus Green)	
				119-120	Filter 281 (Three Quarter C.T. Blue)	
				121-122	Filter 285 (Three Quarter C.T. Orange)	
				123-124	Filter 352 (Glacier Blue)	
				125-126	Filter 353 (Lighter Blue)	
				127-128	Filter 715 (Cabana Blue)	
				129-130	Filter 778 (Millennium Gold)	
				131-132	Filter 793 (Vanity Fair)	
					The following 35 multicolours are intended for using with prisma, rot. gobo, or effect wheel only. If none of the three effects is used, the colours wil not create multicolour effect.	
				133	Multicolour 1 /101 Purple Peony	
				134	Multicolour 2 /104 Magenta	
				135	Multicolour 3 /105 Peach Pink	
				136	Multicolour 4 /106 Purple rose	
				137	Multicolour 5 /107 Bright Crape Myrtle	
				138	Multicolour 6 /109 Cherry Purple	
				139	Multicolour 7 /110 Azalea Purple	
				140	Multicolour 8 /111 Pomegranate Skirt	
				141	Multicolour 9 /112 Lotus Red	
				142	Multicolour 10 /113 Wild Rose Pink	
				143	Multicolour 11 /114 Ravishing Red	
				144	Multicolour 12 /115 Pink Coral	
				145	Multicolour 13 /116 Crape Myrtle	
				146	Multicolour 14 /118 Redbud Purple	

60 Channel	35 Channel	64 Channel	49 Channel	DMX	Function	Note
				147	Multicolour 15 /119 Light Pink	
11		11		148	Multicolour 16 /120 Elegant pink	
				149	Multicolour 17 /121 Light Lilac	
				150	Multicolour 18 /123 Light Hibiscus	
				151	Multicolour 19 /124 Root White	
				152	Multicolour 20 /203 Red Rose	
				153	Multicolour 21 /208 Dawn Red	
				154	Multicolour 22 /210 Bright Rose	
				155	Multicolour 23 /211 Carmine Red	
				156	Multicolour 24 /212 Sunset Red	
				157	Multicolour 25 /213 Light Peach Pink	
				158	Multicolour 26 /214 Ling Xiao	
				159	Multicolour 27 /215 Light Crimson	
				160	Multicolour 28 /216 Cherry Red	
				161	Multicolour 29 /218 Orange Pink	
				162	Multicolour 30 /220 Begonia Red	
				163	Multicolour 31 /221 Yang Fei Red	
				164	Multicolour 32 /222 Apricot White	
				165	Multicolour 33 /305 Amber	
				166	Multicolour 34 /308 Realgar	
				167	Multicolour 35 /309 Sea Breeze Pink	
				168	Multicolour 36 /311 Light Vermilion	
				169	Multicolour 37 /312 Light Wheat Yellow	
				170	Multicolour 38 /405 Bright Amber	
				171	Multicolour 39 /406 Wheat Yellow	
				172	Multicolour 40 /407 Tangerine Yellow	
				173	Multicolour 41 /408 Light Yellow	
				174	Multicolour 42 /409 Moon White	
				175	Multicolour 43 /410 Bright Yellow	
				176	Multicolour 44 /411 Pear Yellow	
				177	Multicolour 45 /412 Ivory White	
				178	Multicolour 46 /503 Vivid Green	
				179	Multicolour 47 /505 Green Mustard	
				180	Multicolour 48 /506 Chive Yellow	
				181	Multicolour 49 /507 Bright Yellow-Green	
				182	Multicolour 50 /508 Pine Pollen Yellow	
				183	Multicolour 51 /509 Pale White	
				184	Multicolour 52 /510 Pale Cyan	
				185	Multicolour 53 /601 Emerald Green	
				186	Multicolour 54 /609 Verdant	
				187	Multicolour 55 /610 Light Emerald Blue	
				188	Multicolour 56 /611 Jade Green	
				189	Multicolour 57 /612 lotus Green	
				190	Multicolour 58 /613 Apple Green	
				191	Multicolour 59 /614 Emerald-Tinted Green	
				192	Multicolour 60 /615 Cerulean Blue	
				193	Multicolour 61 /616 Mint Green	
				194	Multicolour 62 /707 Indigo Blue	
				195	Multicolour 63 /708 Light Green	
				196	Multicolour 64/710 Turquoise Green	
				197	Multicolour 65 /711 Sinomenium acutum	
				198	Multicolour 66 /713 Blue-Green	
				199	Multicolour 67 /714 Sky Blue	
				200	Multicolour 68 /715 Cloudy Water Blue	
				201	Multicolour 69 /716 Light Ink Blue	
				202	Multicolour 70 /717 Light Blue	
				203	719 Azure	
				204	720 Smoke Cyan	
				205	721 Cyan Grey	
				206	801 Deep Blue	
				207	807 Ink Blue	
				208	808 Pale Cyan	
				209	813 Steel Blue	
				210	814 Bright Blue	
				211	815 Cyan Cloud	
				212	902 Peacock Blue	
				213	903 Dark lavender	
				214	904 Violet	
				215	906 February orchid	
				216	907 Lapis Lazuli Blue	
				217	908 Dusk Purple	
				218	909 Foggy Slate	
				219	910 Medium Lavender	
				220	911 Lavender	
				221	912 Light Lavender	
				222	1004 Datura Purple	
				223	1005 Cherry Blossom Purple	
				224	1006 Luxury Purple	
				225	1007 Imperial Purple	

60 Channel	35 Channel	64 Channel	49 Channel	DMX	Function	Note
				226	1010 Bellflower Purple	
				227	1011 Lotus Purple	
				228	1012 NI SHANG Purple	
				229	1013 Strong Purple	
				230	1015 Fei Purple	
				231	1017 Silver Pink	
				232-233	User colour 9	
				234-235	User colour 10	
				236-245	Rainbow effect (with fade time) from slow-> fast	
				246-255	Rainbow effect (without fade time) from slow-> fast	
					Virtual Colour wheel (Use in Compatible Mode 49CH)	
				0	No function	
				1-2	Filter 4 (Medium Bastard Amber)	
				3-4	Filter 10 (Medium Yellow)	
				5-6	Filter 19 (Fire)	
				7-8	Filter 26 (Bright Red)	
				9-10	Filter 58 (Lavender)	
				11-12	Filter 68 (Sky Blue)	
				13-14	Filter 71 (Tokyo Blue)	
				15-16	Filter 79 (Just Blue)	
				17-18	Filter 88 (Lime Green)	
				19-20	Filter 90 (Dark Yellow Green)	
				21-22	Filter 100 (Spring Yellow)	
				23-24	Filter 101 (Yellow)	
				25-26	Filter 102 (Light Amber)	
				27-28	Filter 103 (Straw)	
				29-30	Filter 104 (Deep Amber)	
				31-32	Filter 105 (Orange)	
				33-34	Filter 106 (Primary Red)	
				35-36	Filter 111 (Dark Pink)	
				37-38	Filter 115 (Peacock Blue)	
				39-40	Filter 116 (Medium Blue-Green)	
				41-42	Filter 117 (Steel Blue)	
				43-44	Filter 118 (Light Blue)	
				45-46	Filter 119 (Dark Blue)	
				47-48	Filter 120 (Deep Blue)	
				49-50	Filter 121 (Filter Green)	
				51-52	Filter 128 (Bright Pink)	
				53-54	Filter 131 (Marine Blue)	
				55-56	Filter 132 (Medium Blue)	
				57-58	Filter 134 (Golden Amber)	
				59-60	Filter 135 (Deep Golden Amber)	
				61-62	Filter 136 (Pale Lavender)	
				63-64	Filter 137 (Special Lavender)	
				65-66	Filter 138 (Pale Green)	
				67-68	Filter 139 (Primary Green)	
				69-70	Filter 141 (Bright Blue)	
				71-72	Filter 147 (Apricot)	
				73-74	Filter 148 (Bright Rose)	
				75-76	Filter 152 (Pale Gold)	
				77-78	Filter 154 (Pale Rose)	
				79-80	Filter 157 (Pink)	
				81-82	Filter 158 (Deep Orange)	
				83-84	Filter 162 (Bastard Amber)	
				85-86	Filter 164 (Flame Red)	
				87-88	Filter 165 (Daylight Blue)	
				89-90	Filter 169 (Lilac Tint)	
				91-92	Filter 170 (Deep Lavender)	
				93-94	Filter 172 (Lagoon Blue)	
				95-96	Filter 179 (Chrome Orange)	
				97-98	Filter 180 (Dark Lavender)	
				99-100	Filter 181 (Congo Blue)	
				101-102	Filter 197 (Alice Blue)	
				103-104	Filter 201 (Full C.T. Blue)	
				105-106	Filter 202 (Half C.T. Blue)	
				107-108	Filter 203 (Quarter C.T. Blue)	
				109-110	Filter 204 (Full C.T. Orange)	
				111-112	Filter 205 (Half C.T. Orange)	
				113-114	Filter 206 (Quarter C.T. Orange)	
				115-116	Filter 247 (Filter Minus Green)	
				117-118	Filter 248 (Half Minus Green)	
				119-120	Filter 281 (Three Quarter C.T. Blue)	
				121-122	Filter 285 (Three Quarter C.T. Orange)	
				123-124	Filter 352 (Glacier Blue)	
				125-126	Filter 353 (Lighter Blue)	
				127-128	Filter 715 (Cabana Blue)	

60 Channel	35 Channel	64 Channel	49 Channel	DMX	Function	Note
				129-130	Filter 778 (Millennium Gold)	
				131-132	Filter 793 (Vanity Fair)	
					The following 35 multicolours are intended for using with prisma, rot. gobo, or effect wheel only. If none of the three effects is used, the colours wil not create multicolour effect.	
				133	Multicolour 1	
				134	Multicolour 2	
				135	Multicolour 3	
				136	Multicolour 4	
				137	Multicolour 5	
				138	Multicolour 6	
/	/	/	11	139	Multicolour 7	
				140	Multicolour 8	
				141	Multicolour 9	
				142	Multicolour 10	
				143	Multicolour 11	
				144	Multicolour 12	
				145	Multicolour 13	
				146	Multicolour 14	
				147	Multicolour 15	
				148	Multicolour 16	
				149	Multicolour 17	
				150	Multicolour 18	
				151	Multicolour 19	
				152	Multicolour 20	
				153	Multicolour 21	
				154	Multicolour 22	
				155	Multicolour 23	
				156	Multicolour 24	
				157	Multicolour 25	
				158	Multicolour 26	
				159	Multicolour 27	
				160	Multicolour 28	
				161	Multicolour 29	
				162	Multicolour 30	
				163	Multicolour 31	
				164	Multicolour 32	
				165	Multicolour 33	
				166	Multicolour 34	
				167	Multicolour 35	
				168	Multicolour 36	
				169	Multicolour 37	
				170	Multicolour 38	
				171	Multicolour 39	
				172	Multicolour 40	
				173	Multicolour 41	
				174	Multicolour 42	
				175	Multicolour 43	
				176	Multicolour 44	
				177	Multicolour 45	
				178	Multicolour 46	
				179	Multicolour 47	
				180	Multicolour 48	
				181	Multicolour 49	
				182	Multicolour 50	
				183	Multicolour 51	
				184	Multicolour 52	
				185	Multicolour 53	
				186	Multicolour 54	
				187	Multicolour 55	
				188	Multicolour 56	
				189	Multicolour 57	
				190	Multicolour 58	
				191	Multicolour 59	
				192	Multicolour 60	
				193	Multicolour 61	
				194	Multicolour 62	
				195	Multicolour 63	
				196	Multicolour 64	
				197	Multicolour 65	
				198	Multicolour 66	
				199	Multicolour 67	
				200	Multicolour 68	
				201	Multicolour 69	
				202	Multicolour 70	

60 Channel	35 Channel	64 Channel	49 Channel	DMX	Function	Note
				203-215 216-217 218-219 220-221 222-223 224-225 226-227 228-229 230-231 232-233 234-235 236-245 246-255	Reserved User colour 1 User colour 2 User colour 3 User colour 4 User colour 5 User colour 6 User colour 7 User colour 8 User colour 9 User colour 10 Rainbow effect (with fade time) from slow-> fast Rainbow effect (without fade time) from slow-> fast	
12	9	/	12	0-255	**Cyan /Red** Cyan/Red 0%-100%	
13	/	/	13	0-255	**Cyan Fine/Red Fine** Cyan fine/Red fine 0%-100%	
14	10	/	14	0-255	**Magenta/Green** Magenta/Green 0%-100%	
15	/	/	15	0-255	**Magenta Fine /Green Fine** Magenta fine/Green fine 0%-100%	
16	11	/	16	0-255	**Yellow/Blue** Yellow/Blue 0%-100%	
17	/	/	17	0--255	**Yellow Fine /Blue Fine** Yellow fine/Blue fine 0%-100%	
/	/	12	/	0-255	**Red** Red 0%-100%	
/	/	13	/	0-255	**Red Fine** Red fine 0%-100%	
/	/	14	/	0-255	**Green** Green 0%-100%	
/	/	15	/	0-255	**Green Fine** Magenta fine/Green fine 0%-100%	
/	/	16	/	0-255	**Blue** Blue 0%-100%	
/	/	17	/	0-255	**Blue Fine** Blue fine 0%-100%	
/	/	18	/	0-255	**Amber** Amber 0%-100%	
/	/	19	/	0-255	**Amber Fine** Amber fine 0%-100%	
/	/	20	/	0-255	**Light Green** Light Green 0%-100%	
/	/	21	/	0-255	**Light Green Fine** Light Green fine 0%-100%	
18	12	22	18	0-1 2-64 65 66-109 110 111-179 180 181-229 230 231-254 255	**Colour temperature correction (CTC)** 8000K Colour temperature changing 7978 K ->6622 K (22 K /1 DMX) 6600 K Colour temperature changing 657 8K ->5622 K (22 K/1 DMX) 5600 K (110=default) Colour temperature changing 5580 K ->4220 K (20 K/1 DMX) 4200 K Colour temperature changing 4180 K ->3220 K (20 K/1 DMX) 3200 K Colour temperature changing 3180 K ->2720 K (20K /1 DMX) 2700K	
19	/	23	19	0 1-127 128 129-254 255	**Green correction** Uncorrected white Minus green --> uncorrected white Uncorrected white (128=default) Uncorrected white --> Plus green Uncorrected white	
20	/	24	20	0-9 10-19 20-29 30-39 40-49 50-59 60-69 70-79 80-128	**Colour mix control** **Defines relation between Virtual Colour wheel and colour channels:"Virtual" = Virtual Colour Wheel"Colour mix" = Colour channels (CMY/RGBALight Green/CTC)** Virtual has priority over "Colour mix" (0=default) Maximum mode (highest values have priority) Minimum mode (lowest values have priority) Multiply mode (multiply "Virtual" and "Colour mix") Addition mode ("Virtual" + "Colour mix") Subtraction mode ("Virtual" - "Colour mix") Inverted Subtraction mode ("Colour mix"-"Virtual") White Point Off (CTC+Green Cor.+Virtual Colour Wheel deactivated) Reserved	

60 Channel	35 Channel	64 Channel	49 Channel	DMX	Function	Note
				129 130-254 255	Crossfade "Virtual" only Crossfade between "Virtual" and "Colour mix" Crossfade "Colour mix" only	
21	/	25	21		**Speed of rot. Gobo selection**	
				0-255	Speed of rot. gobo selection from max. to min. (0=default)	
22	/	26	22		**Rot. Gobo carousel/ Framing shutters/Zoom/Focus/Iris/Frost/Prism time**	Temporarily ineffective
				0	Function is off (0=default)	
				1-255	Time of rot. Gobo carousel movement (0.1 sec-->25.5 sec.)	
				1-255	Time of framing shutters, zoom, focus, iris and frost movement(0.1sec-->25.5 sec.)	
				1-50	Time of prism movement (0.1 sec-->5 sec.)	
23	13	27	23		**Effect**	
				0-19	No function (0=default)	
				20-127	Proportional indexing (73-center)	
				128-170	Ramping from open to full position (max--->min. speed)	
				171-213	Ramping from open to half position (max. --->min. speed)	
				214-255	Ramp. from half position to full position (max. --->min. speed)	
24	14	28	24		**Effect Rotation**	
				0	No Function	
				1-127	Forwards rotation from fast to slow	
				128	No rotation (128=default)	
				129-255	Backwards rotation from fast to slow	
25	/	29	25		**Effect wheel animations**	
				0-7	No animation (0=default) Note : Set suitable DMX value at Focus channel to get desired animation. All animations were created at distance of 5 m from screen with zoom=88 DMX, Focus value is different for each effect (focus value is stated in parentheses for this distance) The following channels are blocked: Effect wheel positioning, Effect wheel rotation, Rotating gobo wheel, Rot. Gobo indexing and rotation.	
				8-9	Macro 1 (Focus=94)	
				10-11	Macro 2 (Focus=95)	
				12-13	Macro 3 (Focus=96)	
				14-15	Macro 4 (Focus=97)	
				16-17	Macro 5 (Focus=98)	
				18-19	Macro 6 (Focus=99)	
				20-21	Macro 7 (Focus=100)	
				22-23	Macro 8 (Focus=101)	
				24-25	Macro 9 (Focus=102)	
				26-27	Macro 10 (Focus=103)	
				28-29	Macro 11 (Focus=103)	
				30-31	Macro 12 (Focus=103)	
				32-33	Macro 13 (Focus=103)	
				34-35	Macro 14 (Focus=103)	
				36-37	Macro 15 (Focus=103)	
				38-39	Macro 16 (Focus=103)	
				40-41	Macro 17 (Focus=103)	
				42-43	Macro 18 (Focus=103)	
				44-45	Macro 19 (Focus=103)	
				46-47	Macro 20 (Focus=103)	
				48-255	Reserved	
26	15	30	26		**Rotating gobo wheel**	
					Index - set indexing on channel 27/16/31/27	
				0-3	Open/hole (0=default)	
				4-7	Gobo 1	
				8-11	Gobo 2	
				12-15	Gobo 3	
				16-19	Gobo 4	
				20-23	Gobo 5	
				24-27	Gobo 6	
				28-31	Gobo 7	
					Rotation - set rotation on channel 27/16/31/27	
				32-35	Gobo 1	
				36-39	Gobo 2	
				40-43	Gobo 3	
				44-47	Gobo 4	
				48-51	Gobo 5	
				52-55	Gobo 6	
				56-59	Gobo 7	
					Shaking gobos from slow to fast	
					Index - set indexing on channel 27/16/31/27	
				60-69	Gobo 1	
				70-79	Gobo 2	
				80-89	Gobo 3	

60 Channel	35 Channel	64 Channel	49 Channel	DMX	Function	Note
				90-99	Gobo 4	
				100-109	Gobo 5	
				110-119	Gobo 6	
				120-129	Gobo 7	
					Shaking gobos from slow to fast	
					Rotation - set rotation on channel 27/16/31/27	
				130-139	Gobo 1	
				140-149	Gobo 2	
				150-159	Gobo 3	
				160-169	Gobo 4	
				170-179	Gobo 5	
				180-189	Gobo 6	
				190-199	Gobo 7	
				200-201	Open/hole	
				202-222	Forwards gobo wheel rotation from fast to slow	
				223-243	Backwards gobo wheel rotation from slow to fast	
				244-249	Stop	
				250-255	Auto random gobo selection from fast to slow	
					Rot. gobo indexing and rotation	
					Gobo indexing - set position on channel 26/15/30/26	
				0-255	Gobo indexing (128=default)	
					Gobo rotation - set position on channel 26/15/30/26	
27	**16**	**31**	**27**	0	No rotation	
				1-127	Forwards gobo rotation from fast to slow	
				128	No rotation (128=default)	
				129-255	Backwards gobo rotation from slow to fast	
28	**/**	**32**	**28**		**Rot. gobo indexing/rotation - fine**	
				0-255	Fine indexing/rotation (0=default)	
					Rotating gobo wheel2	
					Index - set indexing on channel 30/18/34	
				0-3	Open/hole (0=default)	
				4-7	Gobo 1	
				8-11	Gobo 2	
				12-15	Gobo 3	
				16-19	Gobo 4	
				20-23	Gobo 5	
				24-27	Gobo 6	
				28-31	Gobo 7	
					Rotation - set rotation on channel 30/18/34	
				32-35	Gobo 1	
				36-39	Gobo 2	
				40-43	Gobo 3	
				44-47	Gobo 4	
				48-51	Gobo 5	
				52-55	Gobo 6	
				56-59	Gobo 7	
					Shaking gobos from slow to fast	
					Index - set indexing on channel 30/18/34	
29	**17**	**33**	**/**	60-69	Gobo 1	
				70-79	Gobo 2	
				80-89	Gobo 3	
				90-99	Gobo 4	
				100-109	Gobo 5	
				110-119	Gobo 6	
				120-129	Gobo 7	
					Shaking gobos from slow to fast	
					Rotation - set rotation on channel 30/18/34	
				130-139	Gobo 1	
				140-149	Gobo 2	
				150-159	Gobo 3	
				160-169	Gobo 4	
				170-179	Gobo 5	
				180-189	Gobo 6	
				190-199	Gobo 7	
				200-201	Open/hole	
				202-222	Forwards gobo wheel rotation from fast to slow	
				223-243	Backwards gobo wheel rotation from slow to fast	
				244-249	Reserved	
				250-255	Auto random gobo selection from fast to slow	
					Rot. gobo2 indexing and rotation	
					Gobo indexing - set position on channel 29/17/33	
				0-255	Gobo indexing (128=default)	
					Gobo rotation - set position on channel 29/17/33	
30	**18**	**34**	**/**	0	No rotation	
				1-127	Forwards gobo rotation from fast to slow	
				128	No rotation (128=default)	
				129-255	Backwards gobo rotation from slow to fast	
31	**/**	**35**	**/**		**Rot. gobo2 indexing/rotation - fine**	
				0-255	Fine indexing/rotation (0=default)	

60 Channel	35 Channel	64 Channel	49 Channel	DMX	Function	Note
32	19	36	29		**Prism**	
				0-19	Open position - hole (0=default)	
				20-127	Rotating prism inserted	
					Prism/gobo macros: The following channels are blocked: Prism, Prism rotation, Rotating gobo wheel, Rot. Gobo indexing and rotation.	
				128-135	Macro 1	
				136-143	Macro 2	
				144-151	Macro 3	
				152-159	Macro 4	
				160-167	Macro 5	
				168-175	Macro 6	
				176-183	Macro 7	
				184-191	Macro 8	
				192-199	Macro 9	
				200-207	Macro 10	
				208-215	Macro 11	
				216-223	Macro 12	
				224-231	Macro 13	
				232-239	Macro 14	
				240-247	Macro 15	
				248-255	Macro 16	
33	20	37	30		**Prism rotation**	
				0	No Function	
				1-127	Forwards prism rotation from fast to slow	
				128	No rotation (128=default)	
				129-255	Backwards prism rotation from slow to fast	
34	21	38	31		**Frost**	
				0	Open (0=default)	
					Light Frost	
				1-50	Light Frost from 0% to 100%	
				51-53	100% Light Frost	
				54-63	Pulse closing from slow to fast	
				64-73	Pulse opening from fast to slow	
				74-83	Ramping from fast to slow	
				84-86	Open	
					Medium Frost	
				87-136	Medium Frost from 0% to 100%	
				137-139	100% Medium Frost	
				140-149	Pulse closing from slow to fast	
				150-159	Pulse opening from fast to slow	
				160-169	Ramping from fast to slow	
				170-172	Open	
					Combined Frost	
				173-222	Medium Frost from 0% to 100%	
				223-225	100% Medium Frost	
				226-235	Pulse closing from slow to fast	
				236-245	Pulse opening from fast to slow	
				246-255	Ramping from fast to slow	
35	22	39	32		**Iris**	
				0	Open (0=default)	
				1-179	From max.diameter to min.diameter	
				180-191	Closed	
					Pulse effects with Iris blackout	
				192-219	Pulse opening from slow to fast	
				220-247	Pulse closing from fast to slow	
				248-249	Random pulse opening (fast)	
				250-251	Random pulse opening (slow)	
				252-253	Random pulse closing (fast)	
				254-255	Random pulse closing (slow)	
36	/	40	33		**Iris - fine**	
				0-255	Fine iris movement (0=default)	
37	23	41	34		**Zoom**	
				0-255	Zoom from max. to min.beam angle (128=default)	
38	/	42	35		**ZoomFine**	
				0-255	Fine Zoom positioning	
39	24	43	36		**Focus**	
				0-255	Continuous adjustment from far to near (128=default)	
40	/	44	37		**Focus Fine**	
				0-255	Fine Focus positioning	
41	25	45	38		**Framing Rotation**	
				0-127	Rotation from right (0°) to 60°	
				128	Center (128=default)	
				129-255	Rotation from 60° to left (120°)	
42	26	46	39		**Framing shutter 1- movement**	
				0-255	Movement from Outward to Inward (0=default)	

60 Channel	35 Channel	64 Channel	49 Channel	DMX	Function	Note
43	/	47	/	0-255	**Framing shutter 1 fine- movement fine** Movement from Outward to Inward (0=default)	
44	27	48	40	0-127 128 0-255	**Framing shutter 1- swivelling** Swivelling towards 0 degrees 0 degrees (128=default) Swivelling from 0 degrees	
45	/	49	/	0-127 128 0-255	**Framing shutter 1 fine- swivelling fine** Swivelling towards 0 degrees 0 degrees (128=default) Swivelling from 0 degrees	
46	28	50	41	0-255	**Framing shutter 2- movement** Movement from Outward to Inward (0=default)	
47	/	51	/	0-255	**Framing shutter 2 fine- movement fine** Movement from Outward to Inward (0=default)	
48	29	52	42	0-127 128 0-255	**Framing shutter 2- swivelling** Swivelling towards 0 degrees 0 degrees (128=default) Swivelling from 0 degrees	
49	/	53	/	0-127 128 0-255	**Framing shutter 2 fine- swivelling fine** Swivelling towards 0 degrees 0 degrees (128=default) Swivelling from 0 degrees	
50	30	54	43	0-255	**Framing shutter 3- movement** Movement from Outward to Inward (0=default)	
51	/	55	/	0-255	**Framing shutter 3 fine- movement fine** Movement from Outward to Inward (0=default)	
52	31	56	44	0-127 128 0-255	**Framing shutter 3- swivelling** Swivelling towards 0 degrees 0 degrees (128=default) Swivelling from 0 degrees	
53	/	57	/	0-127 128 0-255	**Framing shutter 3 fine- swivelling fine** Swivelling towards 0 degrees 0 degrees (128=default) Swivelling from 0 degrees	
54	32	58	45	0-255	**Framing shutter 4- movement** Movement from Outward to Inward (0=default)	
55	/	59	/	0-255	**Framing shutter 4 fine- movement fine** Movement from Outward to Inward (0=default)	
56	33	60	46	0-127 128 0-255	**Framing shutter 4- swivelling** Swivelling towards 0 degrees 0 degrees (128=default) Swivelling from 0 degrees	
57	/	61	/	0-127 128 0-255	**Framing shutter 4 fine- swivelling fine** Swivelling towards 0 degrees 0 degrees (128=default) Swivelling from 0 degrees	
58	34	62	47	0-31 32-63 64-95 96-127 128-143 144-159 160-191 192-223 224-255	**Shutter/ strobe** Shutter closed Shutter open (32=default) Strobe-effect from slow to fast Shutter open Opening pulse in sequences from slow to fast Closing pulse in sequences from fast to slow Shutter open Random strobe-effect from slow to fast Shutter open	
59	35	63	48	0-255	**Dimmer** Dimmer intensity from 0% to 100% (0=default)	
60	/	64	49	0-255	**Dimmer Fine** Dimmer Fine	

7.Electrical Connection Diagram

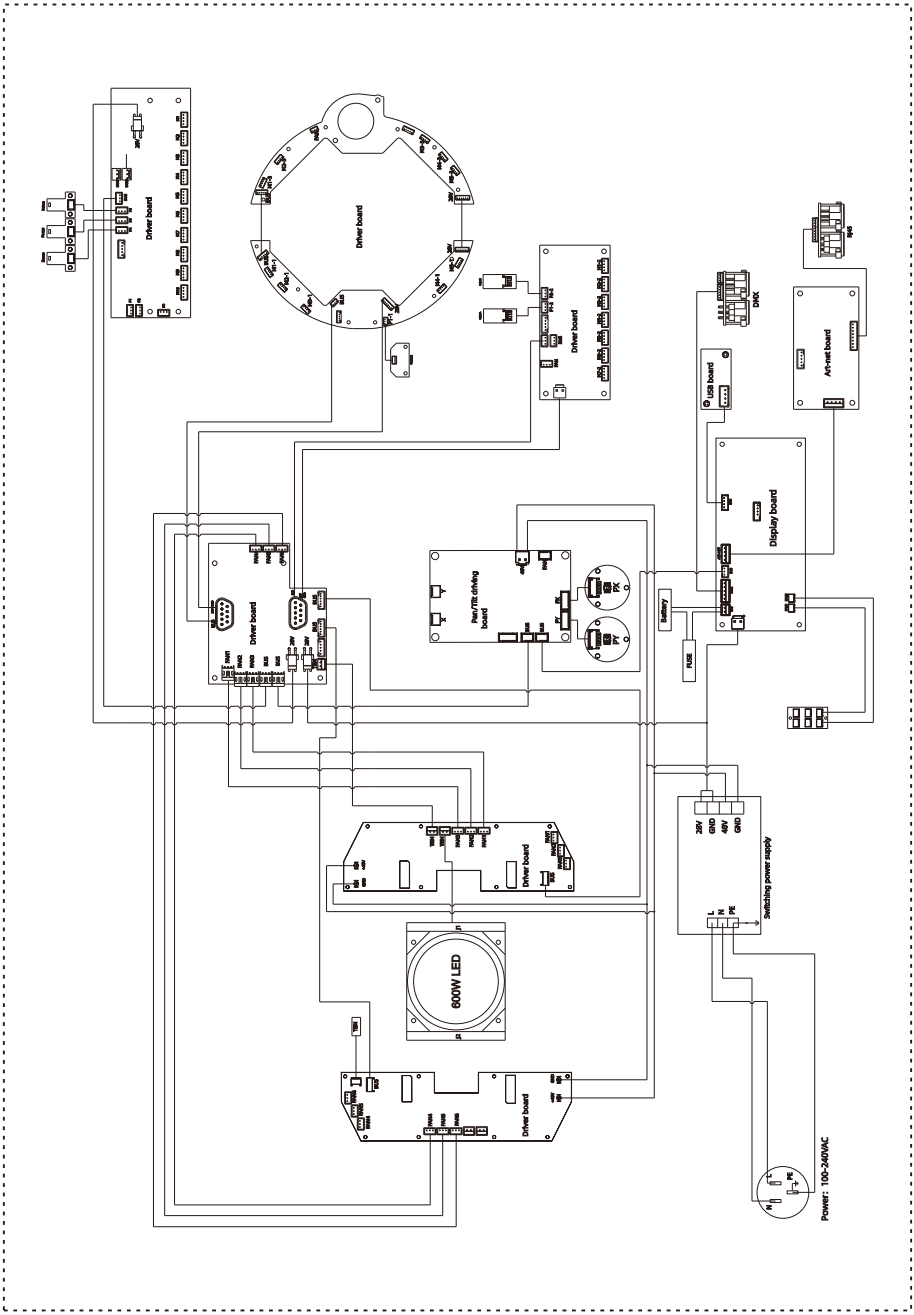

8.Troubleshooting

The following are common faults of lamps and corresponding solutions. Faults that cannot be repaired by yourself should be handled by professionally qualified personnel. Disconnect the power supply to the lamp during maintenance!

● The light source is not bright

- Check that a suitable light source is installed for the luminaire.
- Check whether the power supply connection of the lamp or the control switch is in poor contact.
- Check whether the light source has reached the end of its service life or is damaged, and replace it with a high-quality light source of the same specification.
- Measure whether the power supply is insufficient.
- Check whether the light source has not cooled down completely due to abnormal operation. Let the lamp cool down for more than 15 minutes to allow the light source to cool down. After returning to the normal start-up range, turn the power on again and it can be used normally.
- Check whether the DMX512 controller sends a command to turn on the light source.
- Check whether the light source and trigger circuit are disconnected or defective.
- Check whether the wiring terminals on the internal trigger are in poor contact and tighten the plug.
- Check the "Fan Speed and Voltage" in the "Basic Information" menu to see if the speed of FAN1/FAN2/FAN3 is above 500RPN. If it is below 500RPM, the light source will not light up. Replace the fan with the same specification.
- Check whether the over-temperature protection temperature switch inside the lamp is damaged. Go to the menu "Basic Information" and select "Equipment Temperature" to check - whether the temperature measuring plate shows that the temperature is too high or there is no temperature display.

● The beam appears dim and uneven

- The light source may have reached the end of its service life and does not emit enough light. Replace it with a light source of the same specification.
- Check whether there is dust accumulated in the optical part and clean it.
- Measure whether the power supply is insufficient.
- Finely adjust the screw device used to change the height of the lamp until the ideal light is achieved. Enter the menu "Service Options" and select "Calibration" to enter color and pattern adjustment, which can be adjusted to the center.

● The projected image is blurry

- Check whether the DMX512 controller channel value corresponding to the electronic focus system is suitable for the current projection distance.
- Check whether the mechanical part of the focusing system is stuck, remove the dust and add antifreeze and temperature-resistant lubricating oil.

● The light source of the lamp works intermittently

- Check whether the fan is running normally or is blocked by dust and paper debris.
- Check whether the inlet and outlet cooling air vents are blocked by dust.
- Check whether the lamp has reached the end of its service life.

- Check whether the power supply is insufficient, and whether the power switch and wiring are in poor contact or aging.
- Check whether the over-temperature protection temperature switch inside the lamp is damaged.

● Although it emits light, the lamp does not accept instructions from the controller

- Check whether the digital start address value and function options of the lamp are correct.
- Check whether the connection of the communication control line is correct. The communication line is too long or has been interrupted.
- Check whether the control equipment fails and whether the signal amplifier connected in series fails.
- Check whether the communication line is too long or if other devices interfere with each other.
- Optimize wiring, shorten the length of control signal lines, and route high-voltage and low-voltage lines separately
- Add signal amplifier isolator.
- The signal line is made of high-quality shielded twisted pair (impedance characteristic is 75Ω), and the signal terminal resistor is connected at the end of the lamp.
- Check that the circuit board communication IC or CPU is burned out because the bulb performs an abnormal operation when it is not completely cooled, causing the instantaneous ultra-high voltage leakage generated by the trigger, and replace the PCB board.

● The lamp cannot be started

- Check whether the power supply parameters match the lamps.
- Check whether the fuse at the light fixture's power input is blown.
- Check that the lamp has poor contact or falls off due to extrusion deformation, vibration of internal parts, moisture, etc. during long-distance transportation.
- Check whether the internal wires and connectors of the lamp are desoldered or loose.
- Check whether the electrical components of the lamp (such as power switch, transformer, ballast, capacitor, varistor, filter, power supply PCB board, motor control PCB board, etc.) are loose, short-circuited, burned out, etc.

● Some functions of the lamp cannot accept controller instructions

- Check whether the control device sends correct action instructions for these functions.
- Check whether the mechanical parts corresponding to these functions are loose or deformed.
- Check whether the motor sockets corresponding to these functions are loose or the corresponding driver chips are burned out.
- Check whether the motor wires corresponding to these functions are broken at the corners.
- Check whether the motors corresponding to these functions are damaged.

● During operation, the x or Y direction of the lamp does not move normally

- Click the previous step to check one by one.
- Check whether the corresponding drive belts in the X and Y directions of the lamp are detached or broken.
- Check whether the data feedback receiver corresponding to the X and Y directions in the lamp is damaged.
- Restart the computer and reset it once.

9.Fixture Cleaning

It is absolutely essential that the fixture is kept clean to ensure the maximum light-output and allow the fixture to function reliably throughout its life. The fixture must be cleaned regularly to avoid dust, dirt and smoke-fluid residues building up on or within the fixture. The cleaning frequency depends on the application environment. Clean the fixture immediately if the dust enters it to avoid damage to the optical lens due to excessive dust.

- A soft lint-free cloth moistened with any good glass cleaning fluid is recommended, under no circumstances should solvents be used.
- Always dry the parts carefully.
- Clean the external optical lens at least every 20 days .

CAUTION ! ! !

Disconnect from mains before starting maintenance operation.

10.Duty exonerative and copyright protectio

- Light source belongs to consumption products, not within the scope of warranty.
- The manufacturer shall not bear any responsibility for any damage caused by failure to operate in accordance with this instruction.
- The manufacturer reserves the right of final interpretation for all information in this manual. For any questions, please refer to the official website.
- All the information in this manual shall not be copied without permission.
- The data contained in this statement are subject to change in the future without prior notice.